4.3.26 EXP. NO:- 8

TRANSIENT ANALYSIS OF SERIES RLC CIRCUIT:-

AIM:

To determine transient response of a series RLC circuit using Multisim Simulator.

APPARATUS REQUIRED:-

S.no	Components	Specification	Quantity
1.	CRO	10 MHZ	1
2.	DCB, DIB	—	1
3.	Resistors	10 kΩ	1
4.	Bread board	—	1
5.	Connecting wires	—	—
6.	PC with Multisim Simulator	—	—

Circuit Diagram:-

Choose $R = 10K\Omega$, $L = 10mH$ and $C = 0.1\mu F$ (values of R, L and C can be changed)

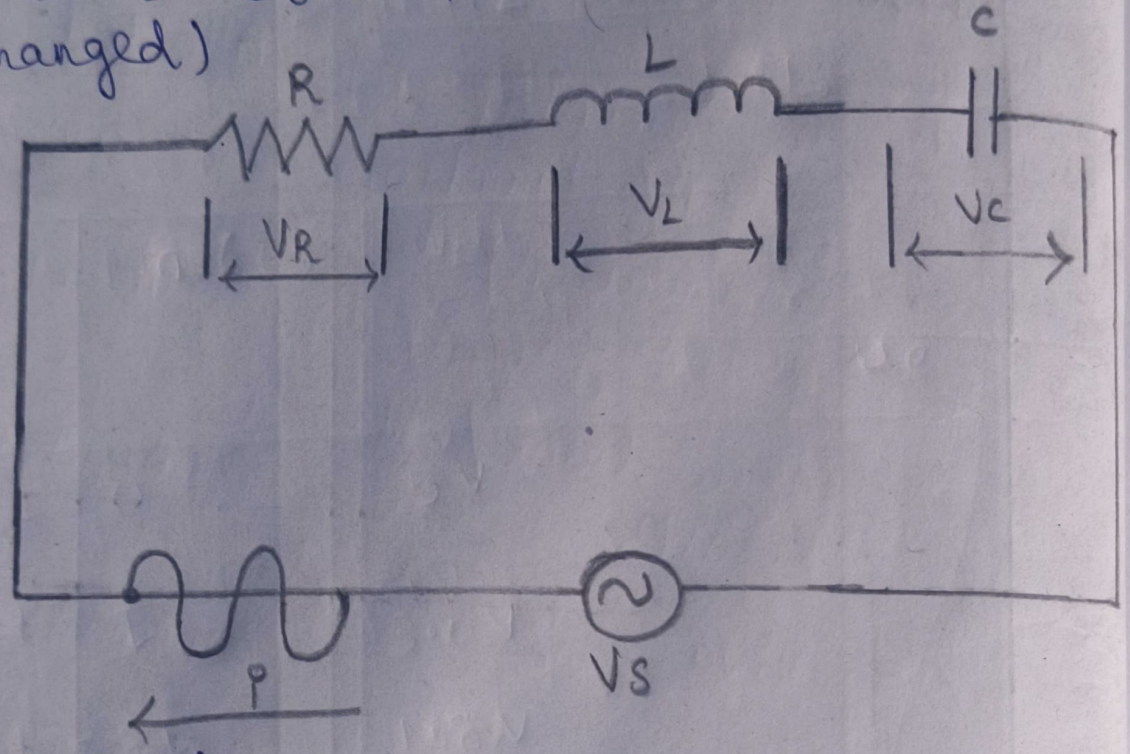

Tabulation:

Voltage across Capacitor:

Vin Amplitude: 5V Vin Frequency: 1KHz

Time constant $\tau = RC =$ 1 MS

Time (t)	Vc(t) - charging cycle (volts) observed value	Vc(t) - Discharging cycle (volts) observed value
t = 0	0	V
t = τ	0.632V	0.368 V
t = 2τ	0.865V	0.135 V
t = 3τ	0.950V	0.050V
t = 4τ	0.982V	0.018 V
t = 5τ	0.993V	0.007V

Verified

Voltage across Inductor:

Vin Amplitude: 5V

Vin frequency: 1KHZ

Time Constant: $\tau = L/R =$ 1 MS

Time(t)	$V_L(t)$ - Voltage across Inductor
	Observed value
$t=0$	5V
$t=\tau$	3.0V
$t=2\tau$	1.8V
$t=3\tau$	1.0V
$t=4\tau$	0.5V
$t=5\tau$	0V

$V_L(t) = V_{in} e^{-t/\tau} \rightarrow t=0 \rightarrow V_L = 10e^{-0}$
$= 10V$

Voltage across capacitor:

$V_c(t) = V(1-e^{-t/x})$

$t=\tau$

$V_c = 1(1-e^{-1}) = 1(1-0.368) = 0.632V$

$t=2\tau$

$V_c = 1(1-e^{-2}) = 1(1-0.135) = 0.865V$

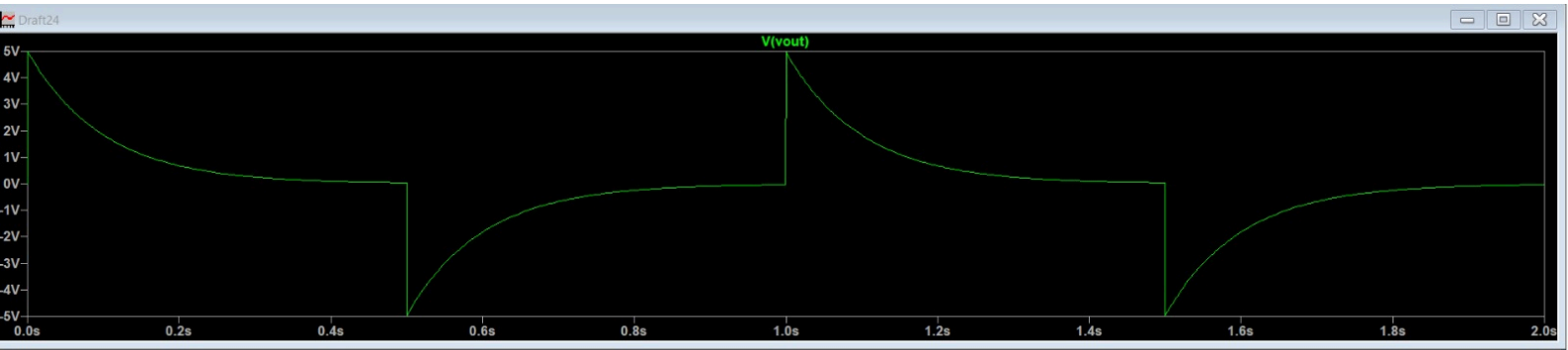
Draft24
V(vout)
5V
4V
3V
2V
1V
0V
-1V
-2V
-3V
-4V
-5V
0.0s
0.2s
0.4s
0.6s
0.8s
1.0s
1.2s
1.4s
1.6s
1.8s
2.0s

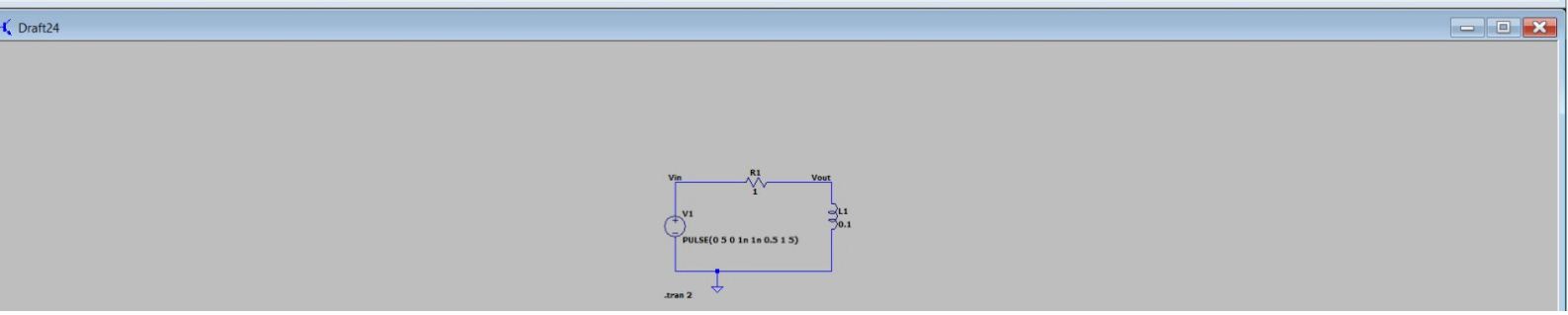
Draft24
Vin
R1
1
Vout
V1
L1
0.1
PULSE(0 5 0 1n 1n 0.5 1 5)
.tran 2

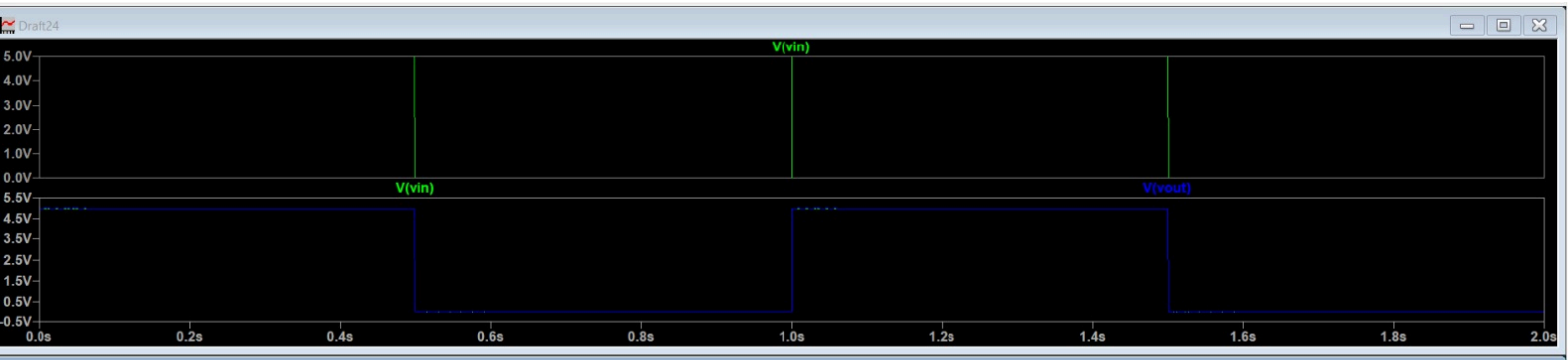
Draft24
V(vin)
5.0V
4.0V
3.0V
2.0V
1.0V
0.0V
V(vin)
V(vout)
5.5V
4.5V
3.5V
2.5V
1.5V
0.5V
-0.5V
0.0s
0.2s
0.4s
0.6s
0.8s
1.0s
1.2s
1.4s
1.6s
1.8s
2.0s

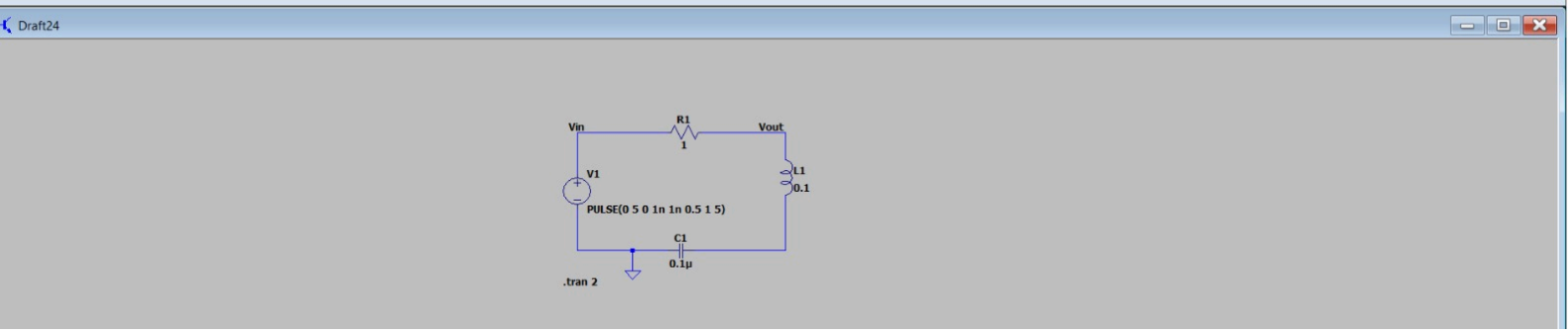
Draft24
Vin
R1
1
Vout
V1
L1
0.1
PULSE(0 5 0 1n 1n 0.5 1 5)
C1
0.1µ
.tran 2

PROCEDURE:-

1. Make connection as per the circuit diagram.

2. Calculate the values of $v_C(t)$, $v_R(t)$ $v_L(t)$ and write in table.

Compare the calculated values and measured values of voltage in both the cases.

Voltage across Resistor:

Time (t)	$V_R(t)$ - Voltage across resistor
	Observed value
$t = 0$	0V
$t = \tau$	2V
$t = 2\tau$	3V
$t = 3\tau$	4V
$t = 4\tau$	4.5 V
$t = 5\tau$	5 V

$V_R(t) = Ve^{-t/\tau} = Ve^{-t/\tau}$

8D
Approved

Tabulation:

Vin Amplitude : 5V

Vin Frequency : 1KHz

Time constant $\tau = RC = 1ms$

Time constant $\tau = L/R = 1ms$

Marks Split -up:

Sl. No	Description	Marks Allotted	Marks obtained
1.	Experimental setup / Connections	20 marks	20
2.	Observation / Readings	20 marks	20
3.	Calculations / Results	20 marks	20
4.	Viva	20 marks	20
5.	Record	20 marks	20
		Total.	100

Calculation:-

Given : $R = 10k\Omega$, $C = 0.1\,\mu F$, $L = 10\,mH$

Time constant

RC Time constant

$$\tau = R \times C$$

$$= 10000 \times 0.1 \times 10^{-6} = 0.001s = 1ms$$

RL Time Constant

$$\tau = \frac{L}{R} = \frac{0.01}{10000} = 1\,ms$$

100

17/10

Result :

Thus, the transient analysis of series RLC circuit is done practically using Multisim simulator.